LithTime

USER'S MANUAL

Lithium Iron Phosphate ($LiFePO_4$) Battery

GROUP 24

12.8V 100Ah

LiFePO4 **Low Temp Protection** **1280Wh · 100A BMS**

CONTENTS

PRODUCT OVERVIEW 01

BATTERY PARAMETERS 02

THINGS TO KNOW BEFORE USING 03

CHARGING METHODS 04

SERIES / PARALLEL CONNECTION 05

WHAT TO DO WHEN THE BATTERY STOPS WORKING? 06

ATTENTION & WARNING 07

WARRANTY 08

APPLICATION 09

PRODUCT OVERVIEW

Operating Voltage: 12.8V

Charging Voltage: 14.4 ± 0.2V

Max. Continuous Charge Current: 100A

Max. Continuous Discharge Current: 100A

Max. Continuous Output Power: 1280W



Additional Components

| M8 Terminal Bolts — The M8 terminal bolts are used to secure single or multiple cable lugs to the battery terminal. Tighten the bolts firmly before use; loose terminals can build up heat and damage the battery. Bolts of other suitable lengths may be used according to actual needs.

| Insulating Caps for Bolts — Cover the battery with the insulating caps after tightening the bolts. Always put on the insulating caps to avoid metal or conductive objects touching the positive and negative terminals at the same time, otherwise it is likely to cause a short circuit.

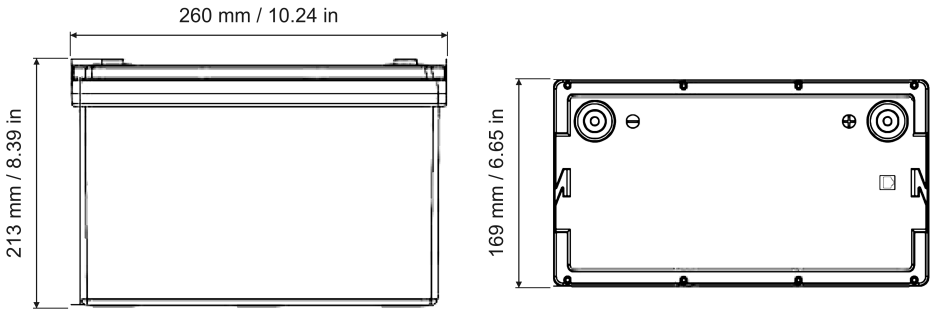

Net Weight: 10 kg / 22.0 lb

BATTERY PARAMETERS

Cell Type	LiFePO4 (Prismatic, Grade A)
Cell Configuration	3.2V 100Ah × 4 (4S1P)
Nominal Voltage	12.8V
Rated Capacity	100Ah (0.2C, 25°C / 77°F)
Rated Energy	1280Wh
Internal Resistance	≤ 40mΩ
Self-Discharge Rate	≤ 2% per month
Battery Management System (BMS)	100A
Charge Method	CC/CV
Charge Voltage	14.4 ± 0.2V
Recommended Charge Current	50A (0.5C)
Max. Continuous Charge Current	100A (1C)
Max. Continuous Discharge Current	100A
Max. Pulse Discharge Current	200A (1 second)
Discharge Cut-off Voltage	10.8V
Max. Continuous Output Power	1280W
Dimension	L 260 × W 169 × H 213 mm L 10.24 × W 6.65 × H 8.39 inch
Weight	10 kg / 22.0 lb
Terminal Type	M8
Case Material	ABS
Protection Class	IP65
Charge Temperature Range	0°C to 50°C / 32°F to 122°F
Discharge Temperature Range	-20°C to 60°C / -4°F to 140°F
Storage Temperature Range	-10°C to 50°C / 14°F to 122°F
Low Temp Cut-off Protection (Charging)	-10°C / 14°F
Low Temp Cut-off Protection (Discharging)	-20°C / -4°F
Resume Charging Temperature Under Low Temp Cut-off Protection	-5°C / 23°F
Resume Discharging Temperature Under Low Temp Cut-off Protection	-10°C / 14°F

① BMS is the Battery Management System board. It protects the battery from over-charge, over-discharge, over-current, low-temperature and short circuit.

THINGS TO KNOW
BEFORE USING

1. Always put on the insulating covers on the post bolts to avoid metal or conductive objects touching the positive and negative terminals at the same time, otherwise it is likely to cause a short circuit.

2. Install the battery upright with the post bolts facing up, and do not mount the battery upside down or on its side. If you need to mount the battery in another orientation, please contact us to confirm the direction.

3. Tightly screw in the post bolts. Having loose battery terminals will cause the terminals to build up heat, resulting in damage to the battery.

4. This battery is not intended to be used to start any devices. Please **DO NOT use it as a starting battery**.

5. Test the battery voltage with a multimeter before the first use. If you have any question about the battery you received, please contact us, we will reply within 24 hours.

Suggestions for Long-term Storage

- Temperature: The battery can be operated at a temperature of -20°C to 60°C / -4°F to 140°F, and a temperature between 10°C to 35°C / 50°F to 95°F is ideal for long-term storage. Store in a fireproof container and away from children.
- Capacity: For a longer-lasting product, it is best to store your battery at a 50% charge level and recharge it every three months if it is not going to be used for a long time.
- Disconnect: Disconnect the battery from all loads and chargers before storing, to prevent parasitic loads from over-discharging the battery.

Tips When Testing the Battery Voltage by a Multimeter

- ① Put the red probe (+) tightly on the positive terminal (not the post bolts) and the black probe (−) on the negative terminal.
- ② Do not touch the metal part of the probes with your hands during use.
- ③ The voltage measured during charging / discharging is not the real voltage of the battery. To test the real voltage, disconnect all connections and let the battery rest for over 30 minutes before measuring.

CHARGING METHODS

Scheme 1: LiFePO4 Battery Charger

Use a 14.6V lithium iron phosphate (LiFePO4) battery charger to maximize the capacity. Recommended charging voltage: between 14.2V and 14.6V. Recommended charging current: 20A (0.2C) — fully charged in around 5 hrs to 100% capacity; 50A (0.5C) — fully charged in around 2 hrs to 97% capacity.

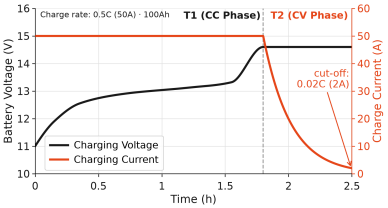

CC · Constant Current (T1)

The battery is charged with a constant current until the voltage rises to the setpoint of 14.6V.

CV · Constant Voltage (T2)

The voltage is held at 14.6V while the current tapers down to 0.02C (tail current, e.g. 100Ah × 0.02C = 2A); then the charging is cut off and the battery is fully charged.

Scheme 2: Solar Panel & Charge Controller

Charge the battery through a charge controller (MPPT). Recommended solar charging power: ≥ 300W; recommended charging current: 0.2C to 0.5C (20A to 50A). Set the controller to the LiFePO4 mode, or select "User Mode" to enter the values below:

Parameter		12V Battery (This Battery)
Charging	Charge / Bulk / Boost Voltage	14.6V
	Over Voltage Disconnect	15V
	Over Voltage Reconnect	14.2V
Discharging	Under Voltage Warning	11.6V
	Under Voltage Recover	12V
	Low Voltage Disconnect	10.8V
	Low Voltage Reconnect	12.4V

The above parameters apply to common controllers / inverters on the market (Victron, Renogy, Growatt, Xantrex, Go Power, Lux Power etc.). Different brands may name parameters differently — set the ones with the same meaning, or contact us for confirmation.

Scheme 3: Alternator / Generator Charging

① Alternator

Connect the vehicle's starter battery to this battery through a DC-DC (battery-to-battery) charger with LiFePO4 mode. Recommended charging current: 0.2C to 0.5C (20A to 50A).

② Generator

Connect an AC-DC charger (with LiFePO4 mode) between the generator and the battery. Recommended charging voltage: 14.6V; recommended charging current: 0.2C to 0.5C (20A to 50A).

SERIES / PARALLEL CONNECTION

The Premise of Connection

To connect in series or / and parallel, batteries should meet the below conditions:

- a. Identical batteries with the same battery capacity (Ah) and BMS (A);
- b. From the same brand (as lithium batteries from different brands have their special BMS);
- c. Purchased in near time (within one month).

Limitation for Series / Parallel Connection

Support connecting up to 16 identical batteries for up to:
4 in series as a 51.2V 100Ah battery system; 4 in parallel as a 12.8V 400Ah battery system.

Parallel Connection

12.8V 400Ah

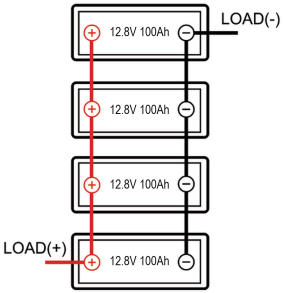

Series Connection

51.2V 100Ah

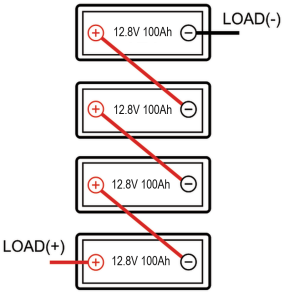

Max. Connection in Series & Parallel(4S4P)

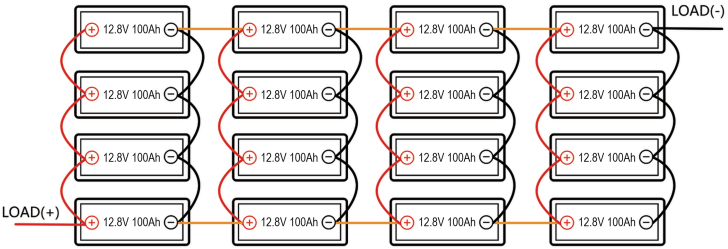

Connection Steps

STEP 1. Fully charge the battery separately.
STEP 2. Wait for 15 mins and then test the voltage of each battery. The battery should be above 13V and it is best to keep the voltage difference of each battery less than 0.1V.
STEP 3. Connect your batteries in series, parallel, or a combination of both.

It is recommended to rebalance the battery voltage every 6 months by repeating STEP 1–2 if you are connecting multiple batteries as a battery system.

WHAT TO DO WHEN THE BATTERY STOPS WORKING?

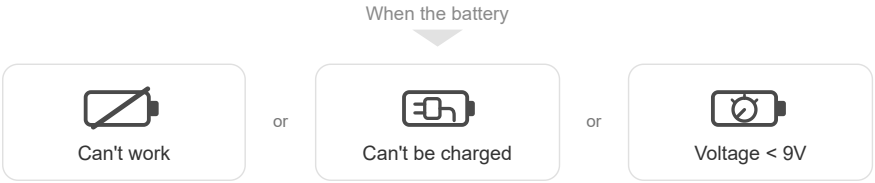

It has an 85% chance that the BMS has shut it off for protection. You could try one of the below ways to activate the battery.

General Steps

If the BMS has cut off the battery for protection, follow the below steps to activate it:

1. Cut off all the connections from the battery (loads, chargers, etc.).
2. Leave the battery aside for 30 mins. Then the battery will automatically recover itself to normal voltage (> 10V) and can be used after being fully charged.

If the battery is unable to recover itself after the above steps, please try activating it by **ONE OF THE BELOW METHODS**. After being activated (voltage > 10V) and fully charged by the normal charging method, it can be used normally.

Method ①

Use a charger with a 0V charging function (lithium battery activation function) to fully charge the battery — such as a $LiFePO_4$ battery charger, a solar charge controller, or a solar inverter with the lithium battery activation function (most solar inverters on the market now support this function). Smart chargers usually do not have a 0V charging function.

Method ②

Use another 12V lithium battery and connect it in parallel with the battery for a minute to activate it (a lead-acid battery with a voltage more than / equal to 12V and less than / equal to 14.6V will also work). After that, fully charge the battery and it can be used normally.

Method ③ Do NOT Use Unless Absolutely Necessary

Connect an 18V~36V solar panel directly to the battery, no solar controller (MPPT) required, charging 3~10 seconds under sunny conditions.

If none of the above methods works, please stop using the battery and contact us for after-sales support.

ATTENTION & WARNING

ATTENTION

Caution: Risk of Fire, Explosion or Burns.

- DO NOT short circuit.
- DO NOT reverse connections from the charger to the battery.
- DO NOT disassemble without seller's guidance.
- DO NOT throw into fire or incinerate.
- DO NOT heat above 70°C / 158°F.
- DO NOT connect batteries with different chemistries, brands, models, rated capacities or nominal voltages in series or parallel.
- DO NOT use the battery as a starting battery for engines / cranking applications.
- Keep the battery away from water, heat sources, sparks and hazardous chemicals. Install it in a clean, cool, dry and well-ventilated place.

WARNING — Prohibition of Disassembly

Never disassemble the cells. The disassembling may generate an internal short circuit in the cell, which may cause gassing, firing, explosion, or other problems.

The Electrolyte is Harmful

Li-Fe battery should not have liquid from electrolyte flowing, but in case the electrolyte comes into contact with the skin, or eyes, physicians shall flush the electrolyte immediately with fresh water and medical advice is to be sought.

Prohibition of Dumping of Cells into Water

Do not soak the battery in any liquid, like water, seawater and non-alcohol drinks, fruit juice, coffee or other drinks.

Prohibition of Using in Below Places

Do not use the battery in a place with strong static electricity and a strong magnetic field, otherwise, it is easy to damage the battery safety protection device and bring hidden danger.

Battery Disposal

The electrodes of the waste battery should be wrapped with insulating paper to prevent fire and explosion. DO NOT dispose of the battery as household waste. Please use recycling channels in accordance with local, state and federal regulations.

WARRANTY

5-Year Warranty Service

We ("Manufacturer") hereby provide a **5-YEAR warranty** to the original purchaser ("User") of this LiFePO4 battery, when purchased from the manufacturer, an authorized distributor or dealer. The battery shall be free from defects in material and / or workmanship during normal usage. This warranty is applicable from the date of original retail purchase and remains in effect for a duration of 5 years (the "Warranty Period"). It is important to note that this warranty exclusively extends to the original purchaser.

- 1. Within 90 days from the date of original retail purchase, if our products have quality problems and cannot work normally, we can provide refund services.
- 2. More than 90 days but less than 5 years from the date of original retail purchase, if our product fails to work normally and both parties confirm that the product does have quality problems after testing, we will at our option, to the extent permitted by law: 1) replace the product parts with new or refurbished ones; or 2) refund part of the purchase cost to the consumer.
- 3. If you encounter any problems when using the product, please feel free to contact us through the customer service email. We will provide customer service within 24 hours.
- 4. Please read the product manual carefully before installing and using the product. If the consumer fails to install, use and maintain the product correctly in accordance with the requirements of the instruction manual, which causes serious quality problems in the product, it will not be covered by the warranty.

Damage Caused by Any of the Following Activities is Not Covered by the Warranty

- 1. Improper transportation, storage, installation, wiring or misuse by customer.
- 2. Modification, alteration, dismantling, repair or replacement by individuals.
- 3. Improper working environment, like excessive heat or cold conditions; external influences including unusual physical or electrical stress or force majeure (power failure surges, inrush current, lightning, flood, fire, accidental breakage, etc.).
- 4. Incidental or consequential damage caused by other components of the power system, including but not limited to inverters, charge controllers, breakers, fuses, etc.
- 5. Operation in a non-intended use, or a use which exceeds the recommended or permitted limits or loads of the product outlined in the product specifications.

APPLICATION

- RV, Camper, Trailer, Caravan, Camping Truck, Bus, etc.
- Solar System + Wind Power System
- Home Energy System
- Boat & Fishing
- Wireless Lawn Mowers, Vacuum Cleaners & Washing Machine
- Portable Video Camera & Portable Personal Computer
- Car Audio System
- Light Equipment
- Emergency Lighting Equipment
- Fire Alarm & Security Systems
- Electric Equipment & Portable Telemeter Equipment
- Toys & Consumer Electronics



Power Your Journey

12.8V 100Ah · Group 24 · LiFePO4